User Manual Easy UPS On-Line Lithium-ion SRVL Series Rack/Tower Convertible 1000VA, 2000VA, 3000VA India SRVL1KRI-IN / SRVL2KRI-IN / SRVL3KRI-IN

Important Safety Instructions

SAVE THESE INSTRUCTIONS - This manual contains important instructions that should be followed during installation and maintenance of the UPS.

Read these instructions carefully and look at the equipment to become familiar with the device before trying to install, operate, service or maintain it. The following special messages may appear throughout this document or on the equipment to warn of potential hazards or to call attention to information that clarifies or simplifies a procedure.

The addition of this symbol either to a “Danger” or “Warning” safety label indicates that an electrical hazard exists which will result in personal injury if the instructions are not followed.

This is the safety alert symbol. It is used to alert you to potential personal injury hazards. Obey all safety messages that follow this symbol to avoid possible injury or death.

⚠ DANGER

DANGER indicates a hazardous situation which, if not avoided, **will result in** death or serious injury.

⚠ WARNING

WARNING indicates a hazardous situation which, if not avoided, **could result in** death or serious injury.

⚠ CAUTION

CAUTION indicates a hazardous situation which, if not avoided, **could result in** minor or moderate injury.

NOTICE

NOTICE is used to address practices not related to physical injury.

Product Handling Guidelines

<18 kg
<40 lb

18-32 kg
40-70 lb

32-55 kg
70-120 lb

>55 kg
>120 lb

Safety and General Information

Inspect the package contents upon receipt. Notify the carrier and dealer if there is any damages.

Read Safety Guide supplied with this unit before installing the UPS.

- This UPS is intended for indoor use only.
- Adhere to all national and local electrical codes.
- All wiring must be performed by a qualified electrician.
- Changes and modifications to this unit not expressly approved by APC by Schneider Electric could void the warranty.
- Do not operate this UPS in direct sunlight, in contact with fluids, or where there is excessive dust or high humidity.
- Do not operate the UPS near open windows or doors.
- Use only the mains and communication cables provided along with the UPS.
- The equipment is heavy. Always practice safe lifting techniques adequate for the weight of the equipment.
- Be sure the air vents on the UPS are not blocked. Allow adequate space for proper ventilation.

  Note: Allow a minimum of 20 cm clearance on all four sides of the UPS.
- Additional safety information can be found in the Safety Guide supplied with this unit.
- The UPS input ground conductor must be properly bonded to protective earth at the service panel.
- If the UPS input power is supplied by a separately derived system, the ground conductor must be properly bonded at the supply transformer or motor generator set.

Electrical Safety

- When grounding cannot be verified, disconnect the equipment from the utility power outlet before installing or connecting to other equipment. Reconnect the power cord only after all connections are made.
- Connection to the branch circuit (mains) must be performed by a qualified electrician.
- The protective earth conductor for the UPS carries the leakage current from the load devices (computer equipment). An insulated ground conductor is to be installed as part of the branch circuit that supplies the UPS. The conductor must have the same size and insulation material as the grounded and ungrounded branch circuit supply conductors. The conductor will be green and with or without a yellow stripe.
- The grounding conductor is to be grounded to earth at the service equipment, or if supplied by a separately derived system, at the supply transformer or motor generator set.
- For a UPS with a factory installed power cord, connect the UPS power cable directly to a wall outlet. Do not use surge protectors or extension cords.
- Adhere to all national and local electrical codes.
- All wiring must be performed by a qualified electrician.

Battery Safety

⚠ WARNING

RISK OF CHEMICAL HAZARD AND EXCESSIVE HEAT

- Replace the battery module at least every 10 years or at the end of its service life, whichever is earlier.
- Replace the battery module immediately when the UPS indicates battery replacement is necessary.
- Replace the battery module with the same type of batteries as originally installed in the equipment.

Failure to follow these instructions can result in death or serious injury.

- Servicing of battery modules should be performed or supervised by personnel knowledgeable about batteries and required precautions. Keep unauthorized personnel away from batteries.
- APC by Schneider Electric uses Lithium-Ion batteries. Under normal use and handling, there is no contact with the internal components of the battery.
- The battery typically lasts for eight to ten years. Environmental factors impact battery life. Elevated ambient temperatures, poor quality utility power leading to frequent short duration discharges will shorten battery life.
- For longest battery performance, the ambient temperature should be maintained between 68 and 77 °F (20 and 25 °C).
- Keep cells and batteries clean and dry.
- Discharge the charging source prior to connecting or disconnecting battery terminals.

- In the event of a cell leaking, do not allow the liquid to come in contact with the skin or eyes. If contact has been made, wash the affected area with copious amounts of water and seek medical advice.
- Do not drive nails into the battery pack.
- This equipment contains potentially hazardous voltages. Do not attempt to disassemble the unit. The unit contains no user serviceable parts. Repairs are must performed only by factory trained service personnel.
- Do not strike the battery pack with a hammer.
- Do not stand on the battery pack.
- Do not short circuit battery pack.
- Do not place or use the battery pack near heat or fire.
- Do not use a dropped, damaged or deformed battery pack.
- Do not use the battery pack to power other equipment.
- CAUTION: Before installing or replacing the batteries, remove jewelry such as chains, wristwatches, and rings. High energy through conductive materials could cause severe burns.
- CAUTION: Do not dispose of batteries in a fire. The batteries may explode.
- CAUTION: Do not open or tamper with the battery enclosure. Doing so will expose the cell terminals which poses an energy hazard.
- CAUTION: Do not open or mutilate batteries. Released material is harmful to the skin and eyes and may be toxic.
- CAUTION: Failed batteries can reach temperatures that exceed the burn thresholds for touchable surfaces.
- CAUTION: A battery can present a risk of electrical shock and high short-circuit current. The following precautions should be observed when working on batteries:
  - Disconnect the charging source prior to connecting or disconnecting battery terminals.
  - Do not wear any metal objects including watches and rings.
  - Do not lay tools or metal parts on top of batteries.
  - Use tools with insulated handles.
  - Wear rubber gloves and boots.
  - Determine if battery is either intentionally or inadvertently grounded. Contact with any part of a grounded battery can result in electric shock and burns by high short-circuit current. The risk of such hazards can be reduced if grounds are removed during installation and maintenance by a skilled person.

General Information

- Always recycle used batteries.
- Recycle the package materials or save them for reuse.
- Select a location sturdy enough for the combined weight of the units.
- Operate the UPS within the specified environmental limits.
- Be sure to deliver the used battery to a recycling facility or ship it to Schneider Electric in the replacement battery packing material.

Radio Frequency Warning

This is a category C2 UPS product. In a residential environment, this product may cause radio interference, in which case the user may be required to take additional measures.

Product Description

The APC™ by Schneider Electric Easy UPS is a high performance, uninterruptible power supply (UPS). The UPS helps to protect the connected electronic equipment from utility power blackouts, brownouts, sags, and surges and small utility fluctuations and large disturbances. The UPS also provides battery backup power to the connected equipment until utility power returns to specified levels or the batteries are fully discharged.

This user manual is available in the package and on the APC by Schneider Electric website, www.apc.com.

Package Contents

Read the Safety Guide before installing the UPS.
Inspect the UPS upon receipt. Notify the carrier and dealer if there is damage.

The packaging is recyclable; save it for reuse or dispose of it properly.

Note: The model and serial numbers in a small label located on product label..

Easy UPS 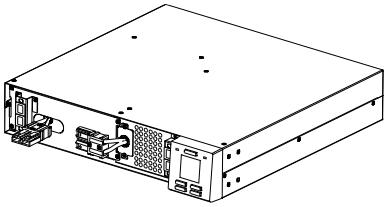	Front bezel 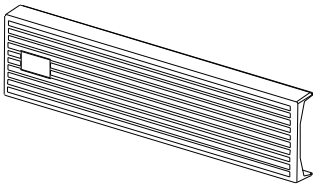
User manual & Safety guide 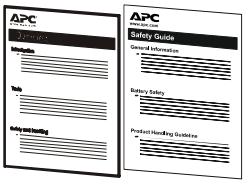	PowerChute management software
RS232 cable 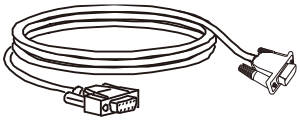	USB cable 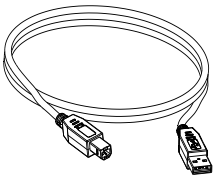
Rack-mount brackets 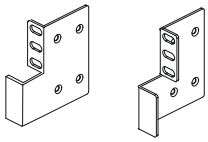 Flat head screws x 8	Stabilizer brackets 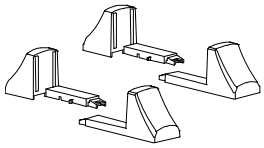 Pan head screws x 4
Utility power cable (India to IEC) 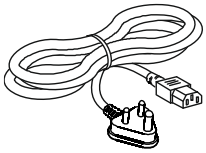	

Optional Accessories

For optional accessories, refer to the APC by Schneider Electric Website at www.apc.com.

Specifications

Environment Specifications

NOTICE

RISK OF EQUIPMENT DAMAGE

- UPS must be used indoors only.
- The installation location should be sturdy to withstand the weight of the UPS.
- Do not operate UPS where there is excessive dust or where the temperature or humidity are outside specified limits.

Failure to follow these instructions can result in equipment damage.

Applicable power grid power distribution system	TN Power System
Applicable standard	IEC 62040-1
Overvoltage category	II

Environmental specifications

		SRVL1KRI-IN	SRVL2KRI-IN	SRVL3KRI-IN
Temperature	**Operating**	0 to 40 °C (0 to 104 °F) at rated load. 40 to 50 °C (104 to 122 °F) derated to 80% of maximum load capacity.		
	Storage	-20 to 50 °C (-4 to 122 °F) During storage, charge the battery every 3 months.		
Elevation	**Operating**	0 - 2,000 m: normal operation 2,000 m – 3,000 m: The load capacity reduces @1% for every 100 m increase in elevation. > 3,000 m: UPS will not work		
	Storage	0 - 15,000 m		
Humidity		0 to 95% relative humidity, non-condensing		
International Protection Code		IP20		
Pollution Degree		2		

Physical Specifications

	SRVL1KRI-IN	SRVL2KRI-IN	SRVL3KRI-IN
Dimensions with Package Height x Width x Depth	240 x 550 x 580 mm (9.45 x 21.65 x 22.83 in)	240 x 580 x 650 mm (9.45 x 22.83 x 25.59 in)	240 x 600 x 800 mm (9.45 x 23.62 x 31.49in)
Dimensions without Package Height x Width x Depth	86 x 438 x 452 mm (3.39 x 17.24 x 17.79 in) *D1=418mm, D2=512mm	86 x 438 x 502 mm (3.39 x 17.24 x 19.76 in) *D1=468mm, D2=572mm	86 x 438 x 632 mm (3.39 x 17.24 x 24.88 in) *D1=598mm, D2=702mm
Weight with Package	16.3 kg (35.94 lb)	21.0 kg (46.30 lb)	26.2kg (57.76 lb)
Net Weight	13.0 kg (28.66 lb)	16.9 kg (37.26 lb)	21.2 kg (46.74 lb)

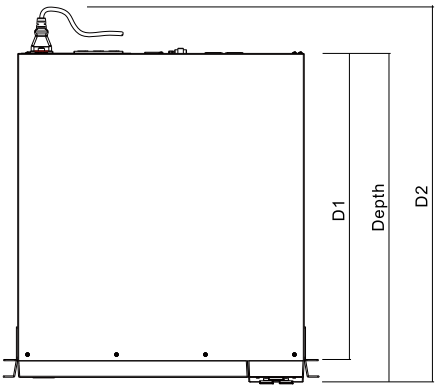

Input Specifications

	SRVL1KRI-IN	SRVL2KRI-IN	SRVL3KRI-IN
Nominal Input Voltage	230 VAC		
Input Frequency	40 – 70 Hz		
Input Voltage Range (100% load)	160 VAC – 285 VAC		
Input Voltage Range (60% Load)	110 VAC – 285 VAC		
Input Power Factor (100% Resistive Load)	≥ 0.95		
Input Connection	IEC320 C14	IEC320 C20	IEC320 C20
Input Protection	Input circuit breaker		

Output Specifications

	SRVL1KRI-IN	SRVL2KRI-IN	SRVL3KRI-IN
Capacity	1000 VA / 900W	2000 VA / 1800W	3000 VA / 2700W
Topology	Double conversion online		
Power Factor	0.9		
Nominal Output Voltage	230 VAC		
Other Programmable Voltage	220 VAC, 240 VAC		
Efficiency at Rated Load in Online Mode*	90%	90%	90%
Efficiency at Rated Load in ECO Mode*	95%	96%	96%
Output Voltage Regulation	± 1% static		
Overload – Online Mode	100%~105%: alarm only, 105%~125%: transfer to bypass after 2 min, 125%~140%: transfer to bypass after 30 secs, >140% : shut down immediately		
Overload – Battery Mode	100%~105%: alarm only, 105%~120%: alert and shut down after 1min, >120%: shut down immediately		
Charger Voltage	42.0 V	52.5 V	52.5 V
Charge Current	5.3 A	10 A	**10 A
Typical Recharge Time, Recover to 90%	1.5 hrs		
Output Voltage Distortion – Online Mode & Battery Mode	• 3% max. for full linear load, • 6% max. for full RCD load (100% VA, 0.9 PF)		
Frequency – Online Mode	50 ± 3 Hz or 60 ± 3 Hz		
Frequency – Battery Mode	50 ± 0.1 Hz or 60 ±0.1Hz		
Crest Factor	3:1		
Transfer Time (Online Mode ↔ Battery Mode)	0 ms		
Waveform	Pure sine wave		
Output Connection	(4) India 6A	(4) India 6A (1) Terminal Block 24A	(4) India 6A (1) Terminal Block 24A
Surge Energy Rating	945J	945J	945J
Noise Level* **	< 50dBA @ 1 Meter		
Bypass	Internal bypass		
Runtime 100% Load ******	10 min		9 min
Runtime 50% Load ******	20 min		18 min
Communication Port	USB port, RS232 serial port, Intelligent card slot		
Management	Windows family and Linux		

*Efficiency is the maximum.
**If load >95%, charging current will be derated to 6 A.
***100% load with battery fully charged at 25 °C.
****Runtime only as reference data at temperature of 25 °C. As batteries age, runtime performance will naturally degrade.

Battery Support

UPS Model	SRVL1KRI-IN	SRVL2KRI-IN	SRVL3KRI-IN
Battery Pack Model	**RBCV181-LI**	**RBCV182-LI**	**RBCV183-LI**
Configuration	Internal battery		
Type	Lithium Ion		
Typical Capacity	230.4 Wh	432 Wh	576 Wh
Nominal Voltage	38.4 V	48 V	48 V
Recommended Charge Voltage	42.0 V	52.5 V	52.5 V
Battery Pack Dimensions Height x Width x Depth	76 x 200 x 250 mm (2.99 x 7.87 x 9.84 in)	76 x 200 x 380 mm (2.99 x 7.87 x 14.96 in)	76 x 200 x 455 mm (2.99 x 7.87 x 17.91 in)
Battery Pack Net Weight	4.4 kg (9.7 lbs)	7.1 kg (15.7 lbs)	9.3 kg (20.5 lbs)

Rear Panel Features

SRVL1KRI-IN

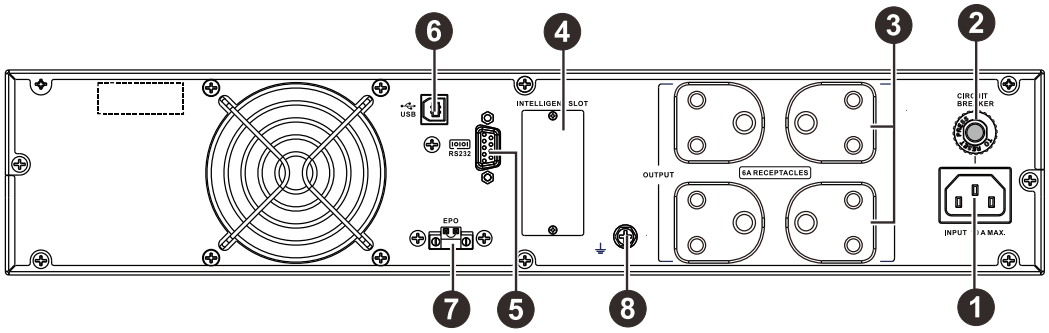

SRVL2KRI-IN

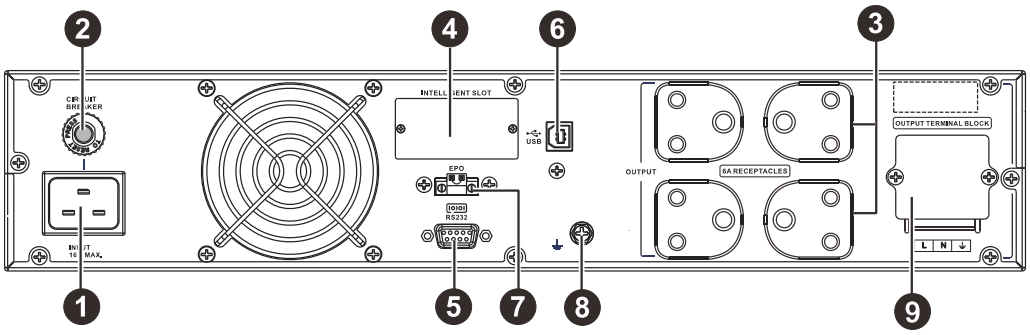

SRVL3KRI-IN

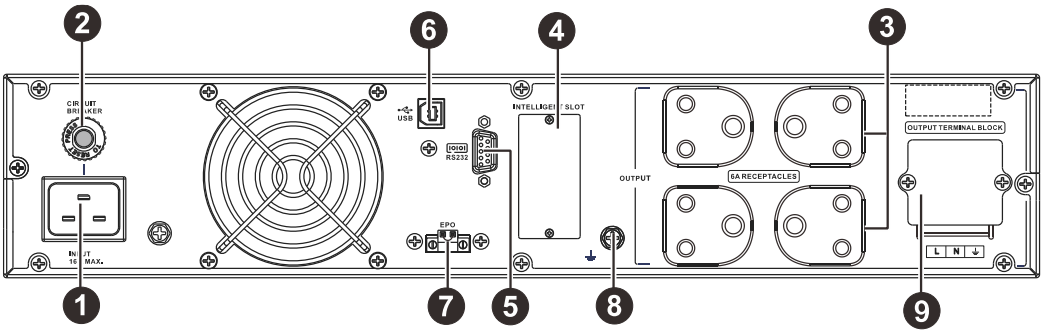

❶	AC input cable	❻	USB port
❷	Input circuit breaker	❼	EPO port (Emergency power off connector)
❸	Outlets	❽	Ground screw (tightening torque: 12 kgf.cm)
❹	Intelligent card slot	❾	Output terminal block (Tightening torque: 5kgf.cm; Wire: 14AWG/1.5mm2)
❺	RS232 serial port		

NOTE 1: Actual UPS may differ in appearance from illustration.

Basic Connectors

USB

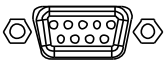

Serial port

Intelligent card slot

Power management software and interface kits can be used with the UPS. **Use only interface kits supplied or approved by APC by Schneider Electric.**

Front Panel Display Features

These Easy UPS models are equipped with an intuitive and configurable LCD display. This display complements the software interface as both convey similar information and either may be used to configure the Easy UPS settings.

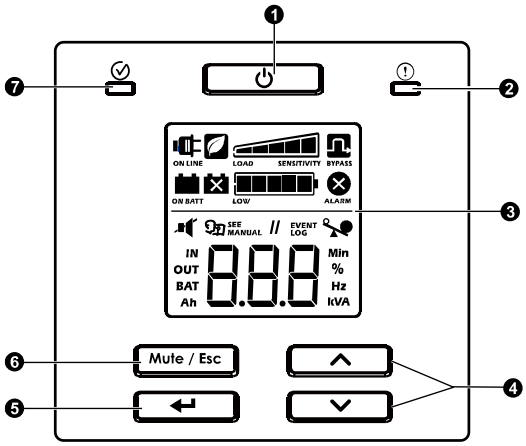

❶	POWER ON/OFF button	• Press this button to turn on the UPS. • Press and hold this button until a beep is heard to turn off the UPS. • Press this button to reset alarms.
❷	Alarm LED	This Alarm **LED** illuminates red when the UPS detects an internal error and blinks red for UPS notifications. See "Alarms and System Events" on page 17 in this manual.
❸	LCD Display	The display interface options are visible on this LCD screen. Press the or button to activate LCD, if the display is not illuminated.
❹	UP / DOWN button	Press these two buttons to scroll through the main menu options and display screens.
❺	ENTER button	Press this button to enter the menu or to select a menu item/ value during navigation.
❻	MUTE/ESC button Mute / Esc	• To acknowledge audible alarms and mute them temporarily. If alarm is not in the mute mode, check "Audible Alarm" on page 20 for the details in this manual. • To exit a sub menu and return to the main menu.
❼	Status LED	The **Status LED** illuminates green when the power is on. This LED indicates two different states of output power: • **Output off**: LED blinks. Press POWER ON/OFF button to turn the output power on. • **Output on**: LED illuminates green continuously.

LCD display icons

ON LINE	**On Line:** The UPS is drawing utility power and performing double conversion to supply power to the connected equipment.
ON BATT	**On Battery:** The UPS is supplying battery backup power to the connected equipment.
	Replace Battery: The battery is not connected securely or the battery is nearing the end of its service life and should be replaced.

BYPASS	**Bypass**: The UPS is in bypass mode, and the connected equipment receives the utility power directly. Bypass mode operation is the result of an internal UPS event or an overload condition. Battery operation is not available while the UPS is in bypass mode. See “Alarms and System Events” on page 18 in this manual.
	Green Mode: This icon in combination with Bypass icon, indicates that the UPS is working in Green mode. The connected equipment will receive the utility power directly as long as the input voltage and frequency are with in the configured limits.
ALARM	**System Alarms:** An internal error is detected. See “Alarms and System Events” on page 17 in this manual.
	Overload: The equipment connected to the UPS is drawing more power than rated.
LOW	**Battery Charge:** The battery charge level is indicated by the number of bar sections illuminated. When all five blocks are illuminated, the battery is fully charged. Each bar represents approximately 20% of the battery charge capacity. The icon **LOW** will be displayed only when the battery is discharged to low battery state in battery mode.
LOAD SENSITIVITY	**Load Level:** The load percentage is indicated by the number of load bar sections illuminated. Each bar represents approximately 20% of the maximum load capacity.
	Mute: An illuminated line through the icon indicates that the audible alarm is disabled.
SEE MANUAL	**Alarm or notification:** The UPS has detected an internal error or the UPS is in configuration mode. See “Alarms and System Events” on page 17 in this manual.
EVENT LOG	**Event:** The icon is illuminated when the user is viewing the event log.

Tower Installation

⚠ CAUTION

RISK OF FALLING EQUIPMENT

- The Easy UPS is heavy.
- Always practice safe lifting techniques adequate for the weight of the equipment.
- Do not lift the Easy UPS by holding the front panel display.
- Be sure that the stabilizer brackets are installed along with the Easy UPS in tower orientation.

Failure to follow these instructions could result in equipment damage and minor or moderate injury.

Front panel display rotation

❶ Pull out the LCD display on the UPS.

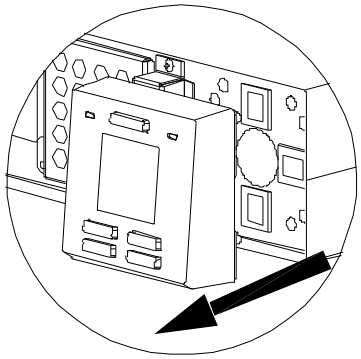

❷ Rotate 90 degrees to the right.

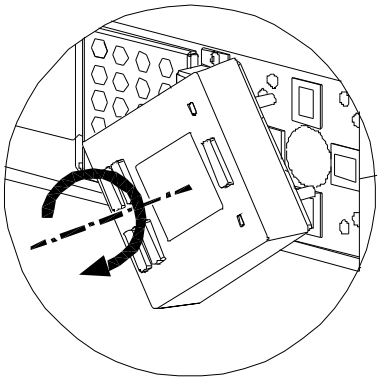

❸ Plug back in the LCD disaplay on the UPS.

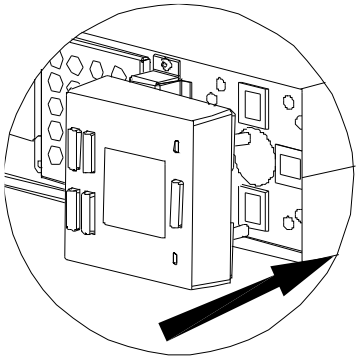

❹

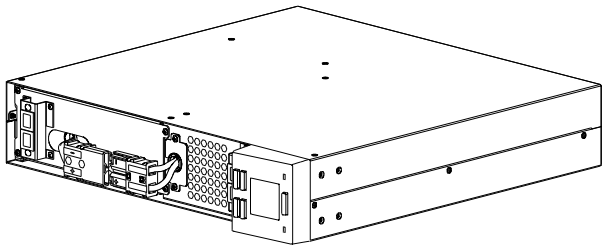

Installing stabilizer brackets

❶

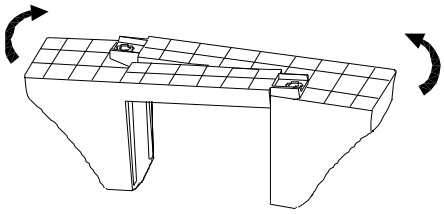

❷ **NOTE:** Use Pan head screws for assembling.

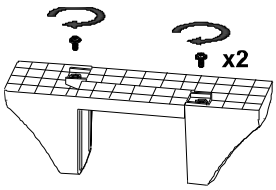

❸

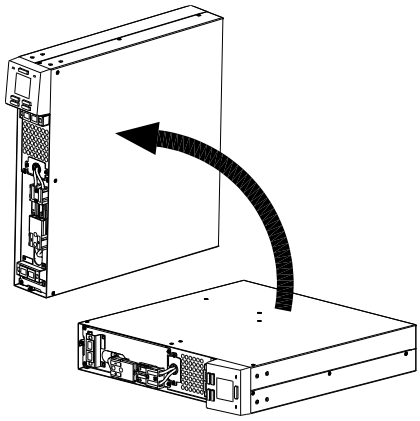

❹ Connect the battery connector.

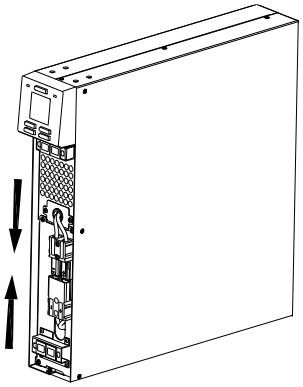

❺ Install the front bezel.

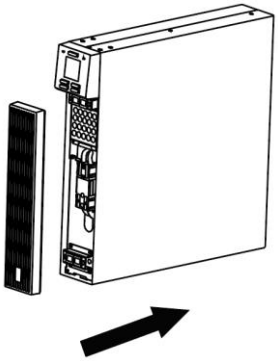

❻

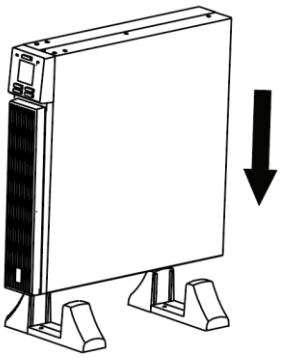

❼

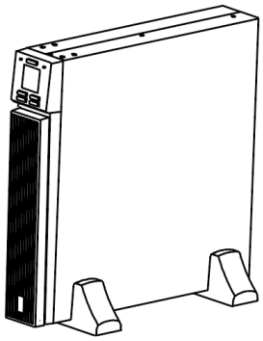

NOTE: Maintain approximately 70 mm distance from the edge of the unit, when installing the stabilizer brackets to the Easy UPS.

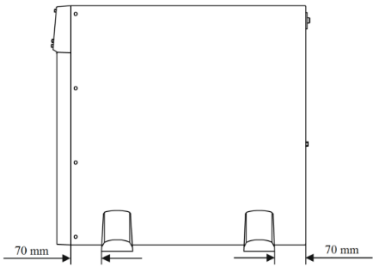

Rack-Mount Installation

⚠ CAUTION

RISK OF FALLING EQUIPMENT

- The equipment is heavy.
- Always practice safe lifting techniques adequate for the weight of the equipment.
- Always use the recommended number of screws to secure brackets to the UPS.
- Always use the recommended number of screws to secure the UPS to the rack.
- Always install the UPS at the bottom of the rack.
- Always install the External Battery Pack below the UPS in the rack.

Failure to follow these instructions could result in equipment damage and minor or moderate injury.

Optional Rail Kit accessories SRVRK1 to enable the installation of Easy UPS in rack-mount configuration is available for purchase. Follow the instructions below to secure and position UPS into the 19 inch rack enclosure.

❶	Install the rack-mount brackets with eight Flat head screws. 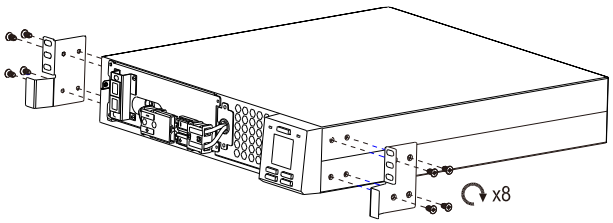	❷	Lift the Easy UPS module and slide into rail kit. 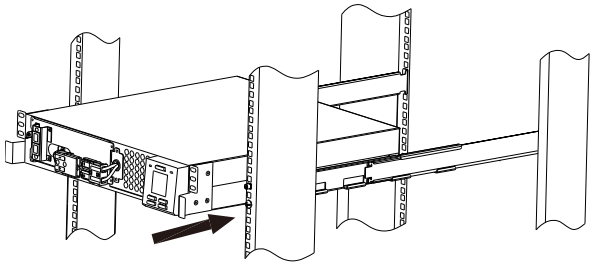
❸	Secure the Easy UPS module to the rack with four Round head screws and nuts (refers to step 2 of rail kit installation.). 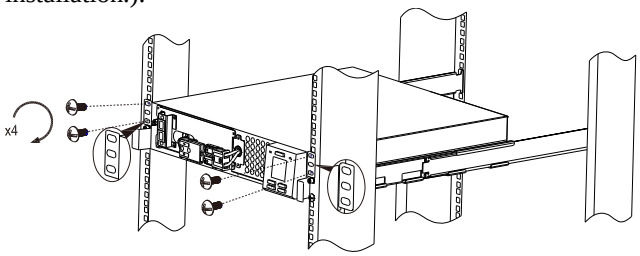	❹	Connect the battery connector. 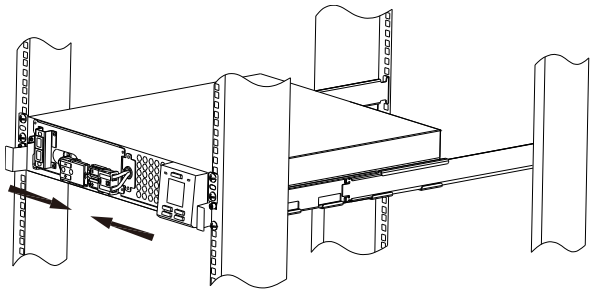
❺	Install the front bezel. 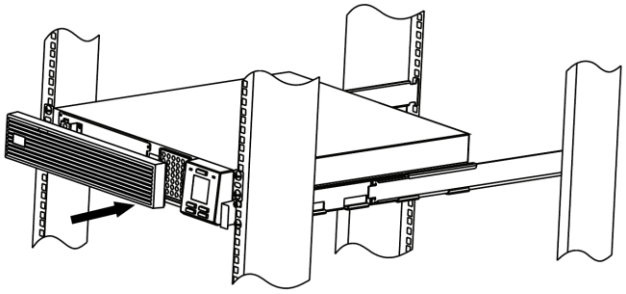		

Start up

⚠ CAUTION

RISK OF ELECTRIC SHOCK

- Adhere to all national and local electrical codes.
- Switch the external circuit breaker off. Practice lockout/tagout procedures.
- Select wire size and connectors according to national and local codes.
- All electrical work must be performed by a qualified electrician.
- Turn off all power to this equipment before working on the equipment. Practice lockout/tagout procedures.
- Do not wear jewelry when working with electrical equipment.

Failure to follow these instructions can result in minor or moderate injury.

Connect the battery

The UPS is shipped with the internal battery disconnected.

❶	Snap the battery connectors together. 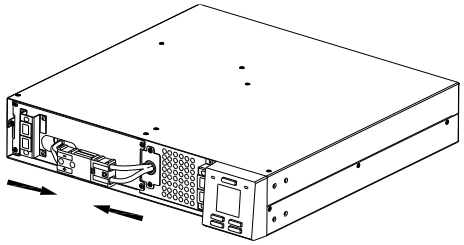	❷	Reinstall the front bezel. 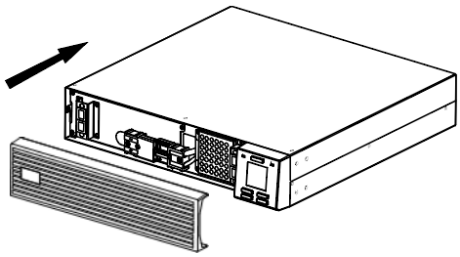

Connect power and equipment to the UPS

1. Connect equipment to the Easy UPS. Do not use extension cords.
2. Connect input utility power to the Easy UPS.
3. Switch on the input utility power. The Easy UPS display panel will illuminate when utility power is available.

Note: If no charging/discharging battery over 20 days, it is required to have the utility input to activate the unit.

Start the UPS

Press ON/OFF button for one second. Release the button when a beep is heard. Then, the UPS will start up.

- The battery charges to 90% capacity during the first two hours of operation.
- ***Do not*** expect full battery runtime during this initial charge period.

Cold start the UPS

Use cold start feature to supply power to connected equipment from the UPS batteries.
Press ON/OFF button. The display panel will illuminate. Press ON/OFF button again to supply battery power to the connected equipment.

Turn off the UPS

Press ON/OFF button for one second. Release the button when a beep is heard. The UPS will power off and LCD display will be turned off in 2 minutes. Make sure that the LCD display is not illuminated before restarting the UPS.

Connect and Install PowerChute™ UPS Management Software

Easy UPS On-Line is provided with PowerChute™ UPS Management Software for unattended operating system shutdown, UPS monitoring, UPS control and energy reporting. The following diagram is a representation of a typical server installation.

1. Connect the USB cable from the rear of the UPS to the protected device such as a server.
   Note: A USB driver is required to communicate with PowerChute over USB. For more information, please refer to Knowledge Base article FA000223363 on the APC website (https://www.apc.com/us/en/faqs/home).

2. For a server or other device with an operating system, download and install latest version of the PowerChute Serial Shutdown from https://www.apc.com/pcss. PowerChute Serial Shutdown supports graceful shutdown in the event of an extended power outage.
   Note: PowerChute is a 64-bit only application and cannot be installed on a 32-bit operating system.
3. A built-in serial port is also available for additional communication options with serial cable.
   Note: RS232 and USB cannot be used at the same time.

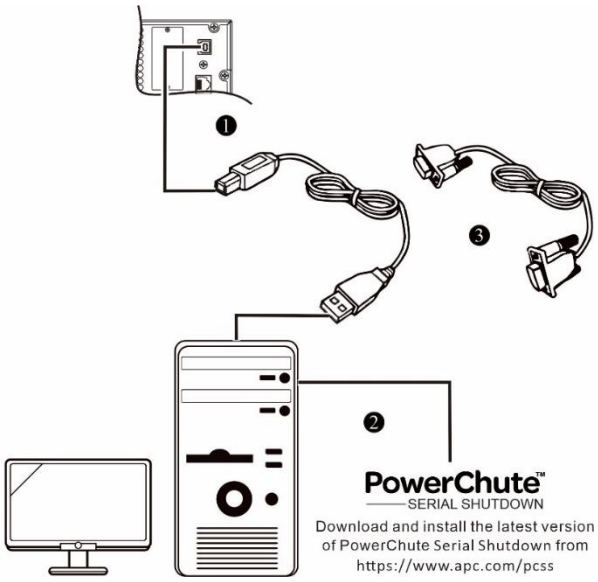

Operation

UPS Display Parameters

Navigate using the ^ or v button of display, so you can see data show on LCD display given in the table.

Parameter	Units	Indicator Icons
Output voltage	VAC	OUT, V
Output frequency	Hz	OUT, Hz
Input voltage	VAC	IN, V
Input frequency	Hz	IN, Hz
Battery voltage	VDC	BAT, V
Ambient temperature	° C	NUMBER, C
State of battery charge	%	BAT, %
Load level in percentage (maximum of Watts or VA)	%	OUT, %
Load level in kVA	kVA	OUT, kVA
Total Ah capacity of connected battery	Ah	BAT, Ah
Remaining on battery runtime	Minutes	BAT, Min

Configure UPS parameters

Follow the steps to configure parameters in the UPS:

1. Press the ↵ button. Press the ^ or v button to navigate to “Set”.
2. Press the ↵ button. Navigate through the parameters using the ^ or v button.
3. Press the ↵ button to edit a parameter. Icons start flashing to indicate the editing.
   Press the ^ or v button to navigate between the options available for the selected parameter.
4. Press the ↵ button to select the option or Mute / Esc button to abort the editing of current parameter.
   Flashing of icons stops after this. Press the ^ or v button to navigate between parameters.
5. Press the Mute / Esc button to exit menu navigation.

UPS settings

Configure UPS settings using the display interface. See “Configure UPS parameters” section to edit the parameters.

Function	Factory Default	User Selectable Options	Description
Output voltage	230 VAC	220, 230, 240 VAC	Allows the user to select output voltage while the UPS is operating online.
Audible alarm	Enable	Enable, disable	When audible alarm occurs, select disable to mute the audible alarm. Then, enable audible alarm again after detected fault/problem is solved to restart audible alarm notification.
Low battery state indication setting	2 min	2 min, 5 min, 7min, 10min	The UPS will emit audible alarm when the actual run time reaches the limit set by the end user. The audible alarm will emit only when the UPS is working in battery mode.
Bypass voltage low setting	184 V	220 V Output: 187 V, 176 V, 165 V, 154 V 230 V Output: 196 V, 184 V, 173 V, 161 V 240V Output: 204 V, 192 V, 180 V, 168 V	The lower voltage value at which the UPS changes over from Bypass mode to On-line mode.
Bypass voltage high setting	276 V	220 V Output: 231 V, 242 V, 253 V, 264 V 230V Output: 242 V, 253 V, 265 V, 276 V 240V Output: 252 V, 264 V, 276 V, 288 V	The upper voltage limit at which the UPS changes over from Bypass mode to On-line mode.
Green mode/ high efficiency mode	Disabled	Enable/Disable	When this mode is enabled, connected equipment receives utility input power through the bypass relay as long as input voltage is within the range of ±5% of configured output voltage and ± 3 Hz of configured output frequency. Inverter is turned off during this mode. If utility power input goes out of range, inverter is turned on. The load is transferred to online mode or battery mode. The power to the connected equipment may be interrupted up to 10 milliseconds.
Charge current setting	1000 VA: 5 A 2000/3000 VA: 10A	1000 VA: 2 A, 3 A, 4 A, 5 A 2000/3000 VA: 2 A, 3 A, 4 A, 5 A, 6 A, 8 A, 10 A	Set the charging current.
Minimum battery capacity to restart setting	0%	0%, 15%, 50%, 90%	UPS output will not be turned on until the battery is charged to a level such that it can provide the runtime configured by this setting. If configured to 0%, UPS output is turned on immediately after utility power returns.
EOL alert setting	Unblock	CLO (Block)/NUL (Unblock)	The UPS will block EOL alert for one week when it is set to “Block”. If the battery is still not replaced in one week, the UPS will provide the alert again.

Advance display navigation

There are five options in main menu and two sub-menu options in UPS display. Press the ↵ button from the Home Screen to access these menu options. Use the ^ or v button to navigate between the menu options.

Menu Option	Description
LOG	**Show Event Log** Use this menu option to see the UPS event log. The UPS records the last 10 events and displays the codes in this log. Press the ↵ button to see the log. Use the ^ or v button to see the logged events. The v button navigates towards old events and the ^ button navigates to new events. Every log entry has a numeric and textual event code. At the end of the log, the word "End" will be displayed. Press the Mute / Esc button to return to the Home Screen.
SEt	**Configure the UPS** Use this menu option to configure the UPS parameters. Press the ↵ button to see the configuration options. See "Configure UPS parameters" on page 15 for details. Press the Mute / Esc button to return to the Home Screen.
UPS	**Show UPS information** Use this menu option to see the UPS information. Press the ↵ button to see the rating of the UPS. Press the ^ button to see the UPS firmware version. Press the Mute / Esc button to return to the Home Screen.
byP	**User Command to bypass** Use this menu option to switch the UPS to bypass mode or bring the UPS to online mode from bypass mode. Press ↵ button: Put — **Put:** Use to switch the UPS to bypass mode of operation. **Note:** Power to the connected equipment will drop, if the mains voltage is not within the threshold limits. Out — **Out:** Bring the UPS out of bypass and restore clean power to the connected equipment.
tSt	**Execute Battery Self-Test** Use this menu option to conduct a self-test and determine the battery status. Press the ↵ button to initiate the test. If the test command is accepted, the UPS will initiate a self-test and will start a count down on the display. Display messages are shown at the end of the test. rFd — Test refused. The output is off or battery is not charged. FId — Test not passed PAS — Test passed Abt — Test is aborted due to internal reasons Press the Mute / Esc button to return to the Home Screen

Alarms and System Events

Audible Alarm

Beeper continuously on	**Event Alarm** - UPS has detected an event. See “Alarms and System Events” in this manual.
Continuous beeps, every half second	**Low Battery State** - The battery is nearing its complete discharge state. The UPS is about to shut down.
	Overload condition - The equipment connected to the UPS is drawing more power than the UPS capacity.
Short beep every 2.5 sec	**Battery disconnected.**
Continuous short beeps every half second for 1 minute, repeats every 5 hours.	**Bad battery (replace).**
4 beeps every 30 sec	**On Battery State** - The UPS is supplying battery backup power to the connected equipment.
Short beep every 2 min	**On Bypass State** – The connected equipment is receiving utility power directly.
2 short beeps every 5 sec	**Event Bypass State** - UPS has detected an internal event. Connected equipment receives utility input power through the bypass relay.

Display code	Description	Solution
bdC	Battery is not connected.	See “Connect the battery ” on page 13 for details. Then, proactively "execute battery self-test" on page 16 for details.
SC	UPS has experienced a short circuit at the output. Unit will try to auto-recover from this condition.	Check if there is any short circuit at the UPS output. Remove the short circuit and wait for the unit auto-recover or Press ⏻ button to start the UPS.
OL	UPS is experiencing an overload condition.	Disconnect non-essential equipment from the UPS to eliminate the overload condition.
dCH	The UPS has detected a DC voltage error. Unit will try to auto-recover from this condition.	If the UPS does not recover automatically, contact APC by Schneider Electric customer support.
Hot	Temperature of the unit is rising above the set limits.	Disconnect non-essential equipment from the UPS to reduce the UPS load. Be sure that ambient temperature is within limits. Be sure that adequate clearance around the UPS is maintained.
CHg	UPS has detected a charger error.	Be sure that there is no short circuit at the battery terminals. Press ⏻ button to start the UPS.
EOL	The battery is nearing its complete life.	If any of conditions stated below occurs, UPS will display “EOL”. Replace the battery pack. ● The number of battery charge and discharge cycle reaches 2000 times. ● The battery has installed over 10 years. After replacing with new battery, it is required to reset the battery installation date through PowerChute management software. Charge the battery to its 100% capacity and discharge it with a connected load (>40% is expected) till low battery shutdown comes to calibrate battery health status. .

Display code	Description	Solution
EPO	EPO alert	Be sure that the EPO terminal is connected securely.
dCF	A low DC voltage error is detected. The UPS will try to auto-recover from this condition.	If the UPS does not recover automatically, contact APC by Schneider Electric customer support.
InF	Inverter soft start error is detected.	If the UPS does not recover automatically, contact APC by Schneider Electric customer support.
OuF	Inverter voltage is too high or too low.	If the UPS does not recover automatically, contact APC by Schneider Electric customer support.

Contact APC by Schneider Electric customer support for all other alarm codes.

Emergency Power Off

NOTICE

RISK OF EQUIPMENT DAMAGE

- Adhere to all national and local electric codes.
- All electrical work must be performed by a qualified electrician.
- Do not connect the EPO interface to any circuit other than an unused circuit.

Failure to follow these instructions can result in equipment damage.

The Emergency Power Off (EPO) function is a feature that will immediately disconnect power to all connected equipment. The EPO switch is internally powered by the UPS for use with non-powered switches or potential free contacts.

Normally closed (N/C) contacts

❶	Loosen the screws of terminals 1 and 2 in the EPO connector. 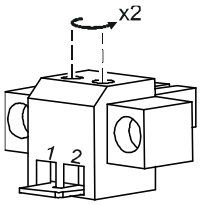	❷	Remove the metal link between pins 1 and 2. 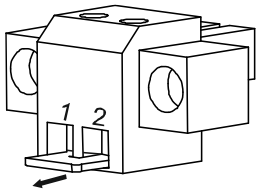
❸	Connect N/C relay contacts between pins 1 and 2 of the EPO terminal block. Use 0.5 to 1 mm^2 wire. 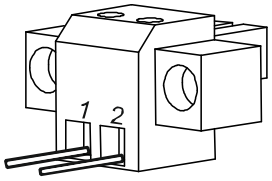	❹	Secure the terminal screws in the EPO connector (Torque: 3 kgf.cm) 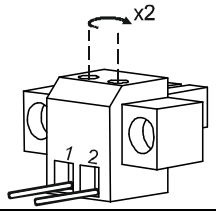

NOTE: If the N/C is open, the UPS will turn off and the connected load will not receive power from the UPS.

Use Class 2 cable (CL2) to connect the Easy UPS to the EPO switch.

The EPO interface is a Safety Extra Low Voltage (SELV) circuit. Connect it only to other SELV circuits. The EPO interface monitors circuits that have no determined voltage potential. Such closure circuits may be provided by a switch or relay properly isolated from the utility. To avoid damage to the UPS, do not connect the EPO interface to any circuit other than an unused circuit.

Use one of the following cable types to connect the UPS to the EPO switch.

- CL2: Class 2 cable for general use.
- CL2P: Plenum cable for use in ducts, plenums, and other spaces used for environmental air.
- CL2R: Riser cable for use in a vertical run in a floor-to-floor shaft.
- CLEX: Limited use cable for use in dwellings and for use in raceways.

Replace Battery Module

Before replacing internal battery, be sure the UPS is turned off.
After replacing with new battery, it is required to reset the battery installation date through PowerChute management software.
Charge the battery to its 100% capacity and discharge it with a connected load (>40% is expected) till low battery shutdown comes to calibrate battery health status.

❶	Remove front bezel. 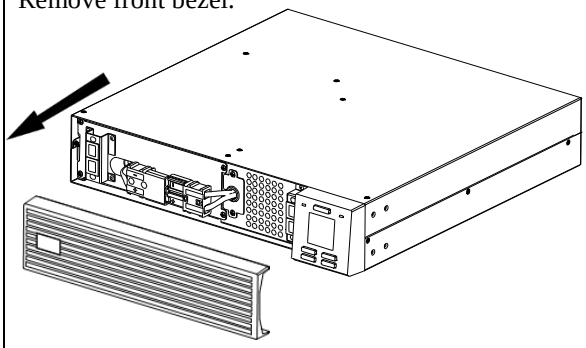	❷	Disconnect the battery connector. 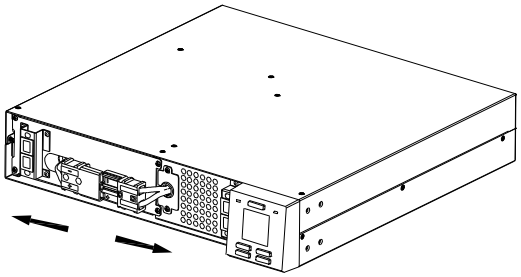
❸	Loosen four screws and remove battery compartment door. 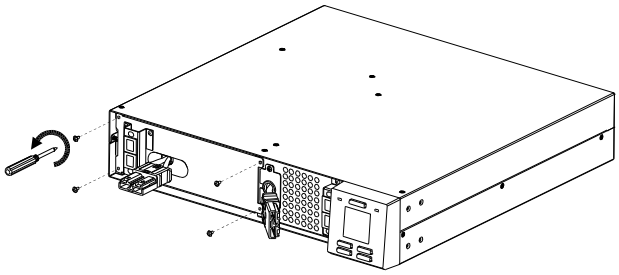	❹	Remove battery module. **NOTE 1: DO NOT** use this handle for lifting or carrying the battery pack. **NOTE 2:** Be aware of the danger of falling when pulling out the battery pack. 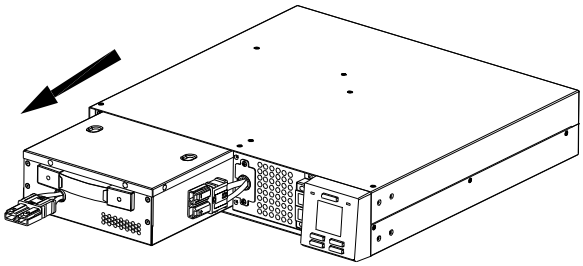
❺	Replace with new battery module. 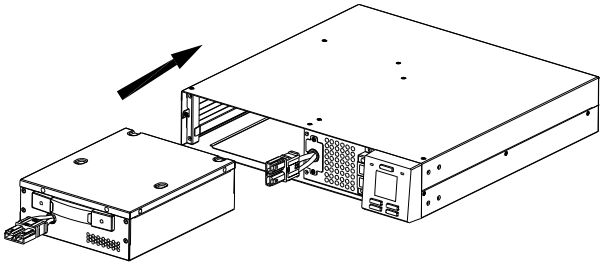	❻	Re-install battery compartment door by fixing four screws. 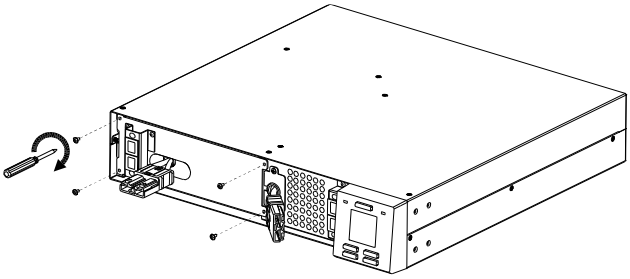
❼	Re-connect battery cable. 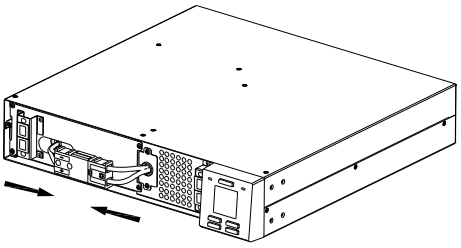	❽	Re-install the front bezel. 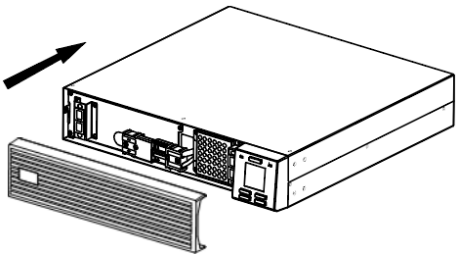

Troubleshooting

Use the table below to solve minor installation and operation problems. Refer to the APC by Schneider Electric website, www.apc.com for assistance with complex UPS problems.

Problem and/or Possible Cause	Solution
UPS is not turning on.	
POWER ON/OFF button not pressed properly.	Press the POWER ON/OFF button for one second. Release the button when the UPS emits a single beep. The UPS will start up.
The UPS is not connected to utility power supply.	Be sure that the power cord from the UPS to the utility power supply is securely connected at both ends.
Input thermal circuit breaker on the UPS is tripped.	Press the input thermal circuit breaker reset button in the rear panel.
The battery has no output because the battery BMS has been turned off	BMS can be activated by charging the battery. Usually, the battery can be activated by connecting the UPS to the utility power. However, if the battery cell voltage is too low and the battery cannot output, the UPS will display a battery disconnect message, and it will return to normal after charging for more than one hour.
UPS is not turning off.	
POWER OFF button not pressed properly	Press POWER ON/OFF button for one second. Release the button immediately when the UPS emits a single beep. The UPS will power off and LCD display will turn off in 2 minutes. Be sure that the LCD display is not illuminated before restarting the UPS.
Utility input power is available.	UPS logic power can not be turned off if utility input power is available. To turn off the UPS, turn off utility input power and press ⏻ button. Release when a beep is heard.
The UPS is operating on battery, while connected to the input utility power.	
There is high, low, or distorted input voltage or frequency.	Connect the UPS to a different outlet on a different circuit. Test the utility input power to be sure the unit is receiving input power. If display is illuminated, navigate and check the input voltage and frequency.
No audible sounds from UPS even when the Alert LED is illuminated.	
Audible alarm is disabled.	Change the UPS configuration to enable audible alarms.
UPS is not supplying power to the connected equipment when operating on battery.	
The UPS is not turned on.	If the UPS has shutdown (the display is not illuminated), follow the procedure “Cold start the UPS” on page 13.
The battery is not connected.	Refer to “Connect the battery” on page 13 for details. Run Battery self test. Refer to "Execute Battery Self Test" on page 16 for details.
Low battery cut off.	UPS may have discharged the battery due to utility power outage and turned the output off due to low battery condition. Wait for the utility power to return and charge the battery.

Problem and/or Possible Cause	Solution
UPS is not providing expected charging time.	
Battery temperature is too high to charging.	The batteries require time to cool down. Once battery temperature is cool down, charging circuit will return to work.
Charging current is set too high.	Re-set charging current as default value.
UPS is not providing expected backup time.	
The UPS battery is discharged due to a recent power outage.	The batteries require recharging after extended outages. Batteries can wear faster when put into service without being fully charged or when operated at elevated temperatures.
The battery is near the end of its service life.	If the battery is near the end of its service life, consider replacing the battery, even if the replace battery indicator is not illuminated. Refer "Start up" on page 13 for details.
UPS is in Bypass mode and the LED is not illuminated red.	
UPS is in green mode.	Disable green mode if not desired.
UPS is configured to stay in the bypass mode.	Change the configuration to exit bypass mode.
UPS is in bypass mode even after over temperature alarm is cleared.	Reduce the connected load to <90% to bring the UPS to online mode.
The UPS has experienced an overload condition and transferred to bypass.	Connected equipment exceeds the "maximum load" as defined in specifications on the APC by Schneider Electric Website, www.apc.com. The UPS continues to supply power as long as it is in bypass mode and the circuit breaker does not trip. Disconnect nonessential equipment from the UPS to eliminate the overload condition.
UPS has detected an internal error and transferred to bypass.	Refer "Alarms and System Events" on page 17 for details.
UPS emits an audible beeping sound at long intervals.	
The UPS is operating normally when running on battery.	UPS has detected an internal error. Refer "Alarms and System Events" on page 17 for details.
Alarm LED is illuminated. The UPS displays an alarm message and emits a constant beeping sound.	
The UPS has detected an internal error.	Refer "Alarms and System Events" on page 17 for details.

Anti-Dust Kit Maintenance

❶	Remove the front panel. 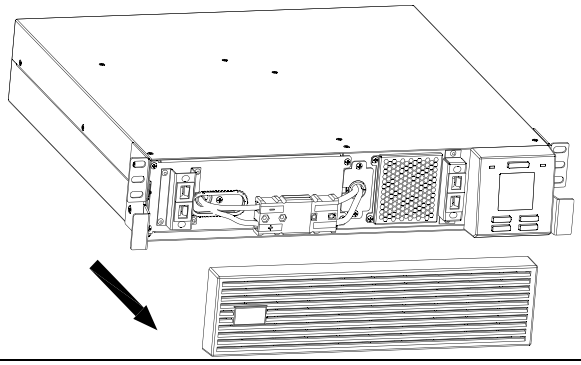	❷	Please loosen the screw in counterclockwise direction on the air filter. Then, dustproof case can be removed and take out air filter foam as shown. 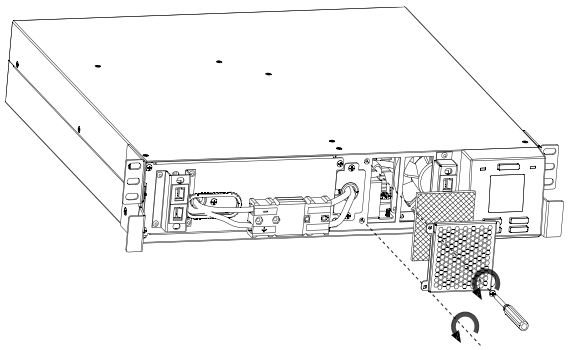

NOTE: Operations must be performed only by trained maintainers.
NOTE: The filter dust should be cleaned once half a year to keep normal operation.

Transport

1. Shut down and disconnect all connected equipment.
2. Disconnect the unit from mains power.
3. Disconnect all internal and external batteries (if applicable).
4. Follow the shipping instructions outlined in the *Service* section of this manual.

Service

If the unit requires service, do not return it to the dealer. Follow these steps:

1. Review the *Troubleshooting* section of the manual to eliminate common problems.
2. If the problem persists, contact APC by Schneider Electric Customer Support through the APC by Schneider Electric website, **www.apc.com**.
   a. Note the model number and serial number and the date of purchase. The model and serial numbers are located on the rear panel of the unit.
   b. Call Customer Support. A technician will attempt to solve the problem over the phone. If this is not possible, the technician will issue a Returned Material Authorization Number (RMA#).
   c. If the unit is under warranty, the repairs are free.
   d. Service procedures and returns may vary internationally. For country specific instructions refer to the APC by Schneider Electric website, **www.apc.com**.
3. Shipment of Lithium Ion Battery is highly regulated and the regulation is evolving. Pack the battery and UPS separately. Always contact Customer Support to get the latest guidance on shipment of Lithium ion battery and UPS.
4. Pack the unit properly to avoid damage in transit. Never use foam beads for packaging. Damage sustained in transit is not covered under warranty.
5. Write the RMA# provided by Customer Support on the outside of the package.
6. Return the unit by insured, prepaid carrier to the address provided by Customer Support.

Limited Factory Warranty

Schneider Electric IT Corporation (SEIT), warrants its products to be free from defects in materials and workmanship for a period of three (3) years from the date of purchase. The SEIT obligation under this warranty is limited to repairing or replacing, at its own sole option, any such defective products. Repair or replacement of a defective product or part thereof does not extend the original warranty period.

This warranty applies only to the original purchaser who must have properly registered the product within 10 days of purchase. Products may be registered online at warranty.apc.com.

SEIT shall not be liable under the warranty if its testing and examination disclose that the alleged defect in the product does not exist or was caused by end user or any third person misuse, negligence, improper installation, testing, operation or use of the product contrary to SEIT recommendations of specifications. Further, SEIT shall not be liable for defects resulting from: 1) unauthorized attempts to repair or modify the product, 2) incorrect or inadequate electrical voltage or connection, 3) inappropriate on site operation conditions, 4) Acts of God, 5) exposure to the elements, or 6) theft. In no event shall SEIT have any liability under this warranty for any product where the serial number has been altered, defaced, or removed.

EXCEPT AS SET FORTH ABOVE, THERE ARE NO WARRANTIES, EXPRESS OR IMPLIED, BY OPERATION OF LAW OR OTHERWISE, APPLICABLE TO PRODUCTS SOLD, SERVICED OR FURNISHED UNDER THIS AGREEMENT OR IN CONNECTION HEREWITH.
SEIT DISCLAIMS ALL IMPLIED WARRANTIES OF MERCHANTABILITY, SATISFACTION AND FITNESS FOR A PARTICULAR PURPOSE.

SEIT EXPRESS WARRANTIES WILL NOT BE ENLARGED, DIMINISHED, OR AFFECTED BY AND NO OBLIGATION OR LIABILITY WILL ARISE OUT OF, SEIT RENDERING OF TECHNICAL OR OTHER ADVICE OR SERVICE IN CONNECTION WITH THE PRODUCTS.

THE FOREGOING WARRANTIES AND REMEDIES ARE EXCLUSIVE AND IN LIEU OF ALL OTHER WARRANTIES AND REMEDIES. THE WARRANTIES SET FORTH ABOVE CONSTITUTE SEIT'S SOLE LIABILITY AND PURCHASER EXCLUSIVE REMEDY FOR ANY BREACH OF SUCH WARRANTIES. SEIT WARRANTIES EXTEND ONLY TO ORIGINAL PURCHASER AND ARE NOT EXTENDED TO ANY THIRD PARTIES.

IN NO EVENT SHALL SEIT, ITS OFFICERS, DIRECTORS, AFFILIATES OR EMPLOYEES BE LIABLE FOR ANY FORM OF INDIRECT, SPECIAL, CONSEQUENTIAL OR PUNITIVE DAMAGES, ARISING OUT OF THE USE, SERVICE OR INSTALLATION OF THE PRODUCTS, WHETHER SUCH DAMAGES ARISE IN CONTRACT OR TORT, IRRESPECTIVE OF FAULT, NEGLIGENCE OR STRICT LIABILITY OR WHETHER SEIT HAS BEEN ADVISED IN ADVANCE OF THE POSSIBILITY OF SUCH DAMAGES. SPECIFICALLY, SEIT IS NOT LIABLE FOR ANY COSTS, SUCH AS LOST PROFITS OR REVENUE, WHETHER DIRECT OR INDIRECT, LOSS OF EQUIPMENT, LOSS OF USE OF EQUIPMENT, LOSS OF SOFTWARE, LOSS OF DATA, COSTS OF SUBSTITUANTS, CLAIMS BY THIRD PARTIES, OR OTHERWISE.

NOTHING IN THIS LIMITED WARRANTY SHALL SEEK TO EXCLUDE OR LIMIT SEIT LIABILITY FOR DEATH OR PERSONAL INJURY RESULTING FROM ITS NEGLIGENCE OR ITS FRAUDULENT MISREPRESENTATION OF TO THE EXTENT THAT IT CANNOT BE EXCLUDED OR LIMITED BY APPLICABLE LAW.

To obtain service under warranty you must obtain a Returned Material Authorization (RMA) number from customer support. Customers with warranty claims issues may access the SEIT worldwide customer support network through the APC by Schneider Electric website: **www.apc.com**. Select your country from the country selection drop down menu. Open the Support tab at the top of the web page to obtain information for customer support in your region. Products must be returned with transportation charges prepaid and must be accompanied by a brief description of the problem encountered and proof of date and place of purchase.

APC by Schneider Electric Worldwide Customer Support

Customer support for this or any other APC by Schneider Electric product is available at no charge in any of the following ways:

- Visit the APC by Schneider Electric website to access documents in the APC by Schneider Electric Knowledge Base and to submit customer support requests.
  - **www.apc.com** (Corporate Headquarters)
    Connect to localized APC by Schneider Electric websites for specific countries, each of which provides customer support information.
  - **www.apc.com/support/**
    Global support searching APC by Schneider Electric Knowledge Base and using e-support.
- Contact the APC by Schneider Electric Customer Support Center by telephone or e-mail.
  - Local, country specific centers: go to **www.apc.com/support/contact** for contact information.

For information on how to obtain local customer support, contact the APC by Schneider Electric representative or other distributor from whom you purchased your APC by Schneider Electric product.

© 2023 APC by Schneider Electric. APC, the APC and PowerChute logo are owned by Schneider Electric Industries S.A.S., or their affiliated companies. All other trademarks are property of their respective owners.

EN TME19881
02/2023